GREATER RAMSEY COUNTY RURAL UTILITIES

SEPTIC HOOK-UP TO FORCEMAIN

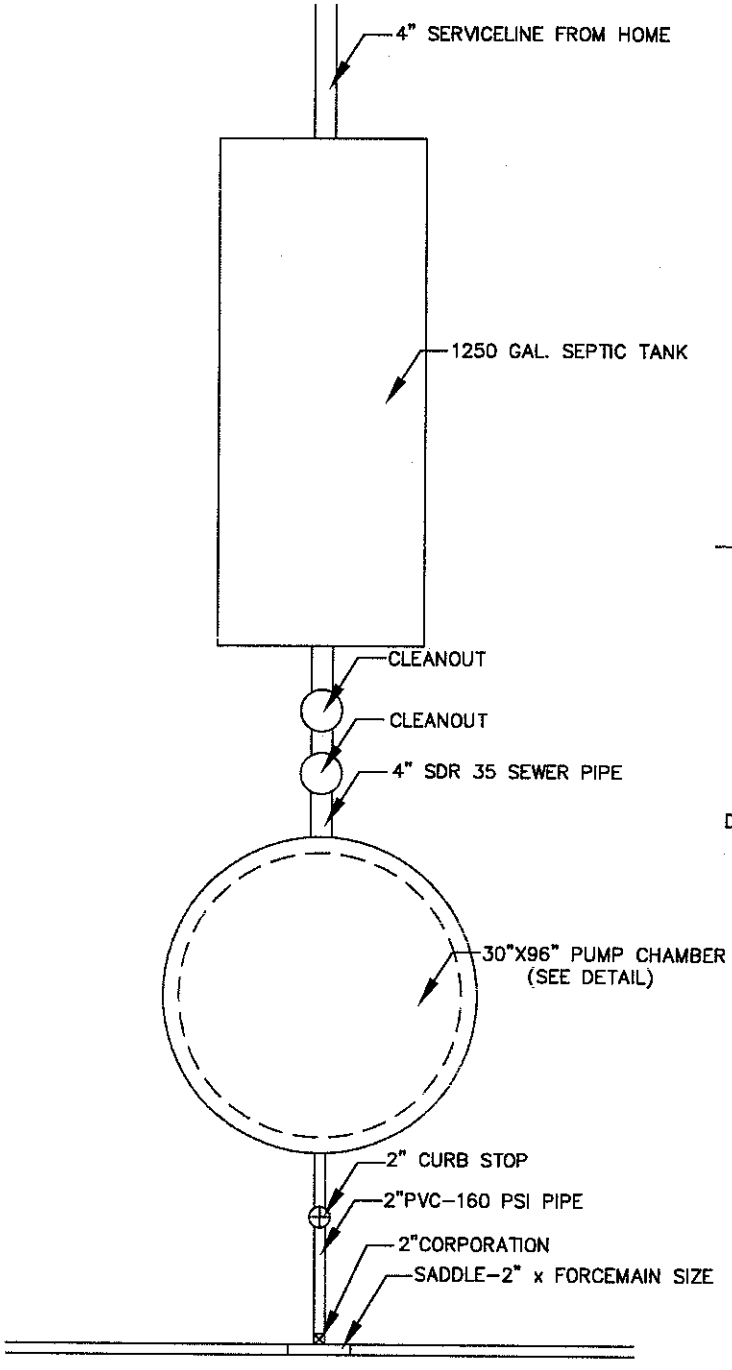

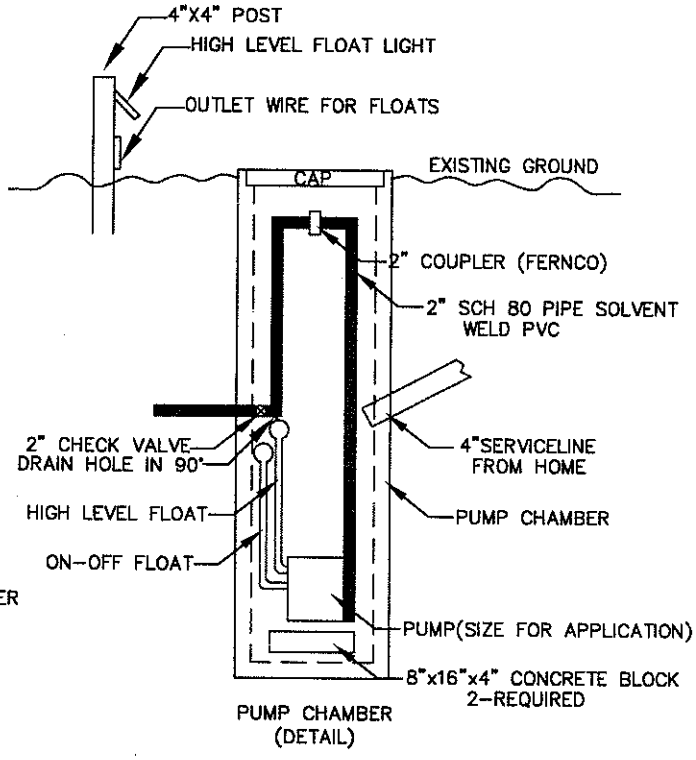

PUMP CHAMBER
(DETAIL)